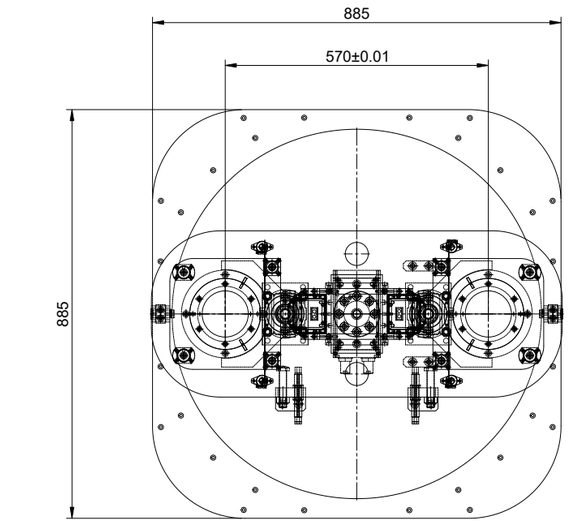

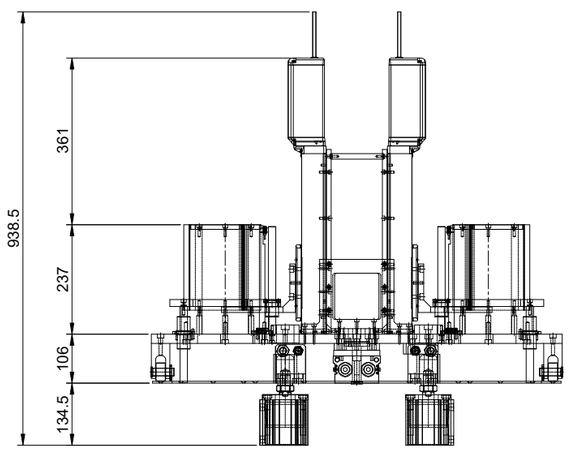

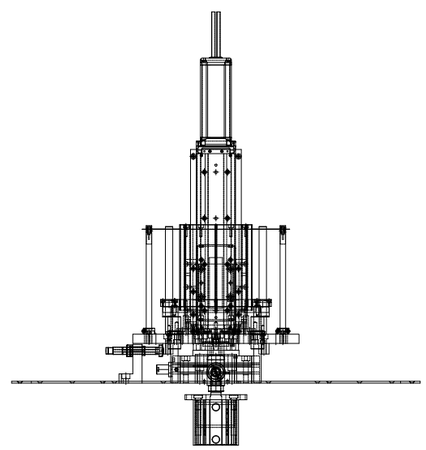

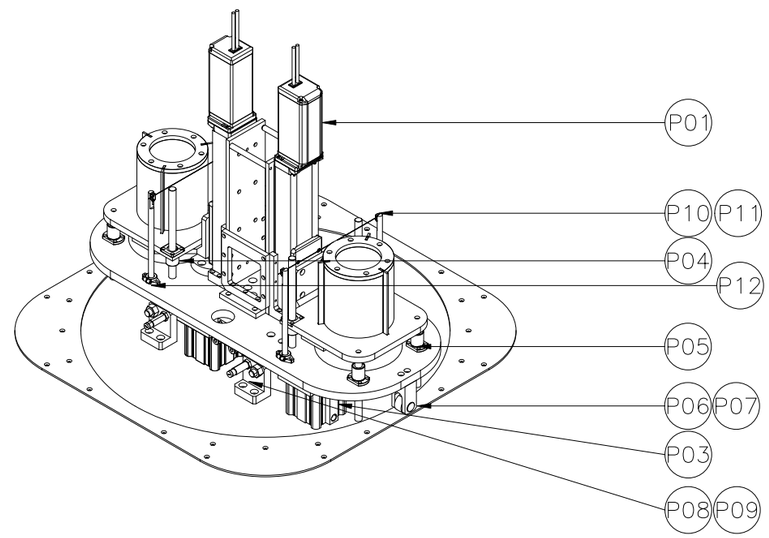

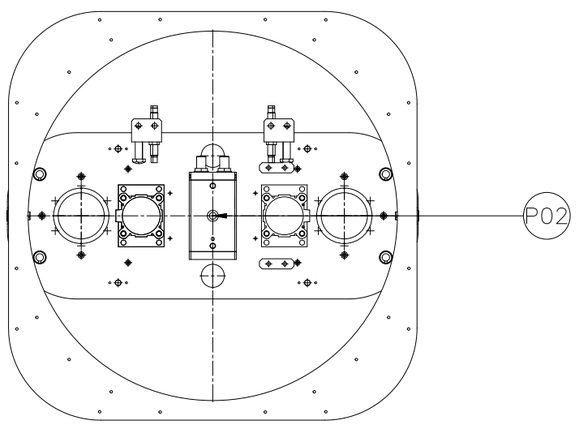

NO	DESCRIOTION	MATERIAL	Q'TY	SEPARATION	TREATMENT	REMARK
P01	ACTUATOR	-	2	P	RCS3-SA6C-I-I-100-S-200-T2-BA6-A/SCON-CB-CC-L3N6 CONTROLLER	IAI
P02	ROTATION CYL	-	1	P	MSQB100A-M9NL	SMC
P03	박형실린더	-	2	P	CDQ2F80M-45DMZ-M9NL	SMC
P04	BUSH	-	4	P	LMK 16	THK
P05	BUSH	-	4	P	LMCH 16L	THK
P06	ROLLER BEARING	-	2	P	NARTV17	MISUMI
P07	HINGE PIN	-	2	P	GSHCLGHN17-38	MISUMI
P08	STOPPER BOLT	-	2	P	SSB-M8X80-B	NBK
P09	SHOCK ABSORBER	-	2	P	MAC1620H	MISUMI
P10	SENSOR	-	2	P	E3T-ST12L	OMRON
P11	SENSOR COVER	-	4	P	E39-S63	OMRON
P12	SHAFT HOLD	-	4	P	SHFD12	MISUMI
		-				
		-				
		-				
		-				
		-				
		-				

기구제작&가공품	
DRAW.NO	조립확인
EVM2023-01-01-001	
EVM2023-01-01-002	
EVM2023-01-01-003	
EVM2023-01-01-004	
EVM2023-01-01-005	
EVM2023-01-01-006	
EVM2023-01-01-007	
EVM2023-01-01-008	
EVM2023-01-01-009	
EVM2023-01-01-010	
EVM2023-01-01-011	
EVM2023-01-01-012	
EVM2023-01-01-013	
EVM2023-01-01-014	
EVM2023-01-01-015	
EVM2023-01-01-016	
EVM2023-01-01-017	
EVM2023-01-01-018	
EVM2023-01-01-019	
EVM2023-01-01-020	
EVM2023-01-01-021	
EVM2023-01-01-022	
EVM2023-01-01-023	
EVM2023-01-01-024	

REVISION						PROJECT	DKC-EVM2023-B/D
DRAW,N	-	SIZE	DIM	SCALE	VIEW	CAMP	BONDING M/C
DESIGN	J.KANG	A0	MM	1 / 6	-	UNIT	제품공급
CHK,D	-	DATE	2023-03-02				
APPO,D	-	REF. NO	-			DRAW.NO	EVM2023-01-01-000

제3각법

DAIICHI KOREA CO., LTD.

TEL 041-546-7731 FAX 041-546-7931

ASSY